Sample Approval Form

Customer: Centra
Attention: Jagdeep Singh
CSR: Nicole Teplan
Die #: 15951
Description: (240 SERIES)
INTERIOR GLAZED
MAIN SASH
Rigid Colour: WH-115
Flex Colour: BLACK
Capstock Colour: N/A

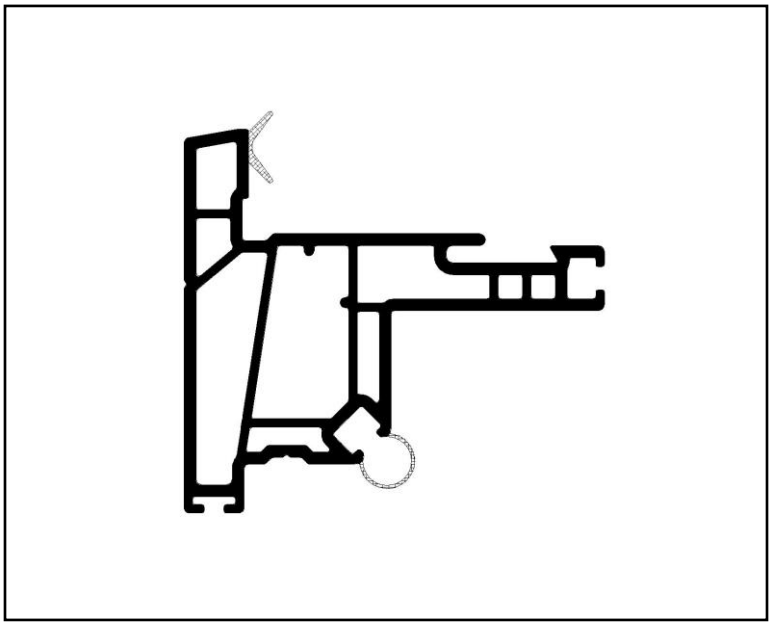

- ☐ Approved
- ☑ Approved with Comments
- ☐ Reject (Please Comment)
- ☐ Re-sample (Please Comment)

Comments: The die drawing is approved with critical dimensions identified on Vision drawing. Vision to update the weight control limits. The physical sample is approved with the dimensions received on the upper limits of wall thicknesses. It is further understood that as the die wears out the wall thickness will drift to thicker side. And the negative impact of thinner wall and overstretching during extrusion to the thermal deformation, structural attachment and profile stability are acknowledged by Vision. Normal distribution around the target thk is acceptable, but consistently thinner profile will not be acceptable.

Customer Signature:

Customer Name: Jagdeep Singh
Position: Engineering Manager
Signature:
Date: 2024-03-16

Vision Profile:

QC Manager: Tri Thai
Plant Manager: Pino Consolmagno

Notes:

(1) Please sign this form and return to your Customer Service Representative. Keep a copy for your records.
(2) Please sign a one foot sample. Return one (1) to your Customer Service Rep. and retain one (1) for your records.
(3) "Approved" indicated that the samples meet all the specifications required for your proper manufacturing and fabrication purposes. An "Approved" Status indicates Customer consent for Vision Profile to anodize and harden the tooling for production.
(4) "Approved with Comments" indicates that the sample does not meet all the specifications required for your proper manufacturing purposes, however, the issues can be addressed before production begins, without the need for re-sampling. Please consult with Vision Profile for any technical support you may need to address these issues.
(5) If samples are rejected, please explain in the comments section.
(6) If re-sampling is required, please explain in the comments section.